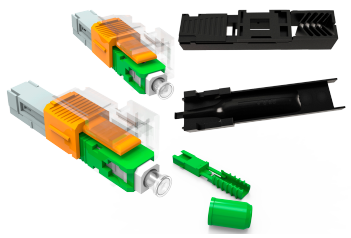

FIELD CONNECTOR EZ! CONNECTOR APC FOR 3mm ROUND CABLE

Description	The Field of Optical Connector was developed for quick and easy connection of compact cables with **diameter 3mm** and **semi tight coating**. Available in SC connector type with APC polish.
Application	It is used to make optical cables field connectorization in FTTx networks, and designed for indoor application in controlled areas or in termination boxes.
Advantage	Easy installation - no special tools required, epoxy or polishing in the field. High optical and mechanical performance. Quick and easy field termination.
Storage Temperature (°C)	-25C° to 75°C.
Operation Temperature (ºC)	-25C° to 75°C.
Physical Characteristics	Axial load: 20N (0,2 dB change).
Width (mm)	9.2.
Height (mm)	7,4.
Depth (mm)	61.
Fiber Type	Single mode.
Polishing Type	APC.
Insertion Loss (dB)	Typical: 0,30 dB / Maximum: 0,50 dB.
Return Loss (dB)	Typical: 50 dB / Maximum: 55 dB.
Included Accessories	• Installation manual; • Mounting jig; • Fiber guide.
Certifications	ANATEL.
Note	

This technical document is authored and exclusively owned by Furukawa Electric LatAm S. A.
It is forbidden to reproduce in whole or in part without mentioning its authorship, as well as changing its content or context. All specifications are subject to change without notice.

The measurements of insertion loss and return loss were made for 1310nm and 1550nm. The performance of the field connector can not be guaranteed if reused. **Use only with optical cables of semi-tight coating.**

Technical drawing

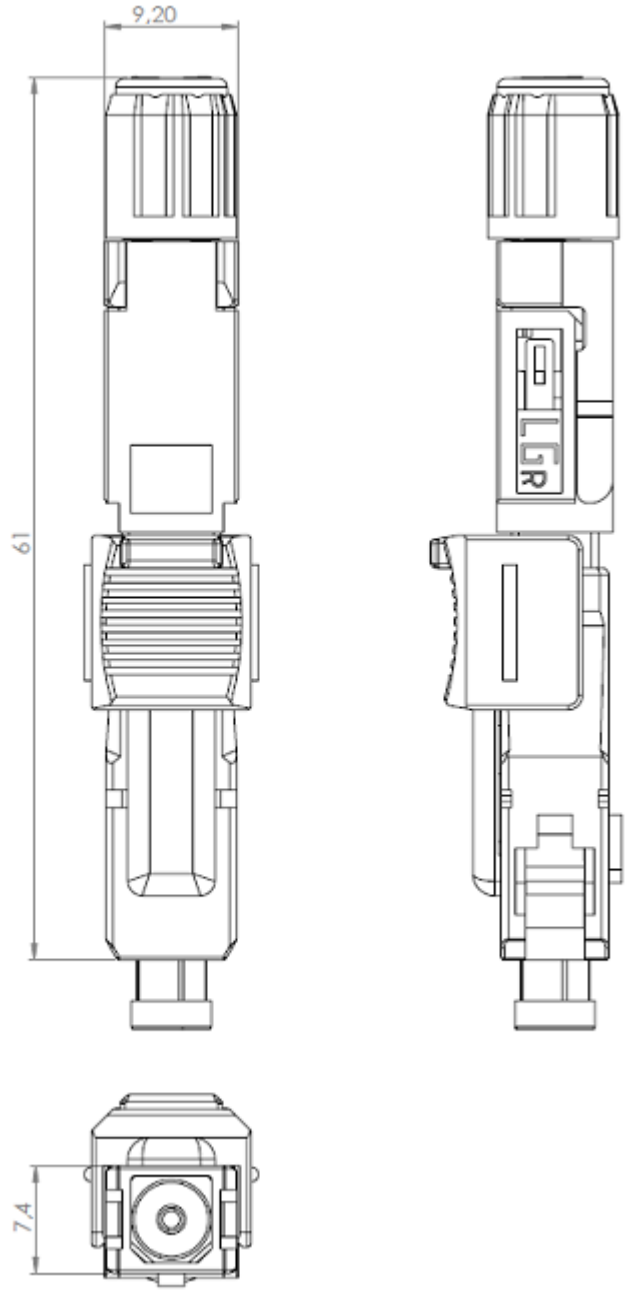

Part Numbers

This technical document is authored and exclusively owned by Furukawa Electric LatAm S. A.
It is forbidden to reproduce in whole or in part without mentioning its authorship, as well as changing its content or context. All specifications are subject to change without notice.