8 Fibers Single Mode Fanout | 0.9 mm

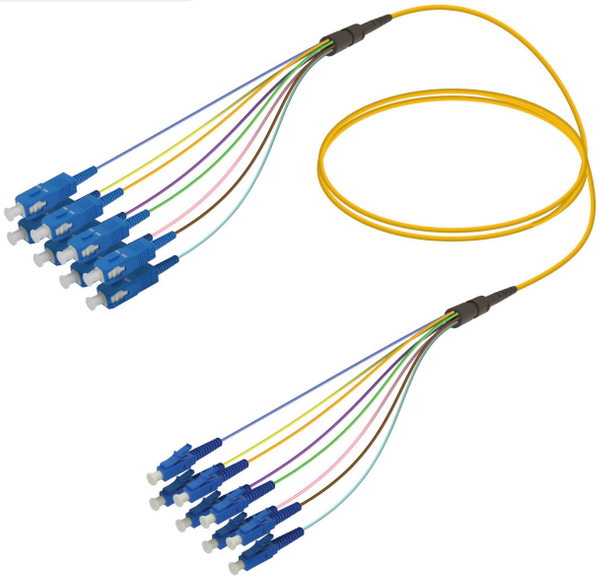

Connector Specifications

LC Connector Compliance	IEC 61754-20, TIA 604-10-A, RoHS
SC Connector Compliance	IEC 61754-4, TIA 604-3, RoHS
One Side Connector Count	8 Connectors
Alignment Technology	Full ceramic ferrule (Zirconia ZrO_2)
Operating Temperature	-40°C to +85°C
Flammability	UL94 V-0
Durability	< 0.1dB typical change for > 500 matings

Optical Performance

Insertion Loss IEC 61300-3-4 Method B	Single Mode ≤ 0.30dB
Return Loss IEC61300-3-6 Method B	Single Mode UPC: ≥ 50dB Single Mode APC: ≥ 60dB

Endface Control Parameters

Geometry Inspection	UPC : IEC 61755-3-1 APC : IEC 61755-3-2
Visual Inspection	IEC 61300-3-35

Cable Specifications

- 8 core distribution fiber optic cable
- CPR: Dca, s2, d0, a1
- Cable Diameter: 3.0 mm / Subunit Diameter: 0.9 mm
- Length tolerance is ± 50 mm
- Max. Tensile Strength: 200N
- Min. Bending Radius 20 mm
- Cable Color is Yellow

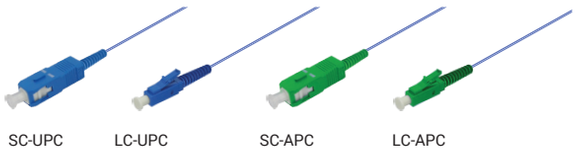

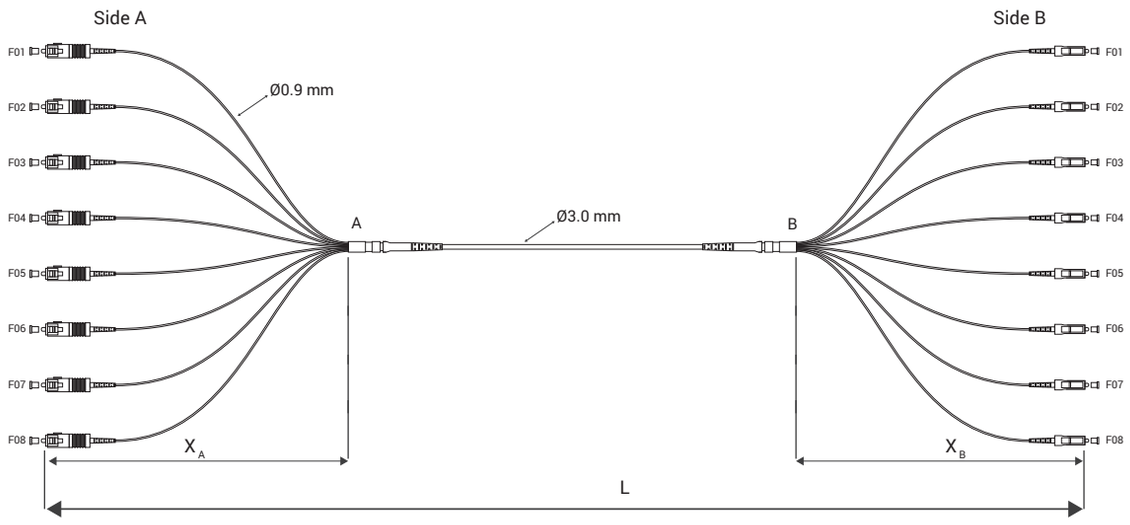

* X (Tube Length) is standard 1000 mm. Please contact us for different tube length.

Sample Coding I - PC - 08 - FC - 309 - A2 - 08SCS - 08LCS - 005M

Type	Type	Fiber Count	Cable Type	Diameter	Fiber Type	1. Connector	2. Connector	Length
Indoor: I	Patch Cord: PC	8 Fibers: 08	Fanout: FC	3.0/0.9 mm: 309	SM G.657 A2: A2	SC-UPC: 08SCS SC-APC: 08SAS LC-UPC: 08LCS LC-APC: 08LAS	SC-UPC: 08SCS SC-APC: 08SAS LC-UPC: 08LCS LC-APC: 08LAS	___M

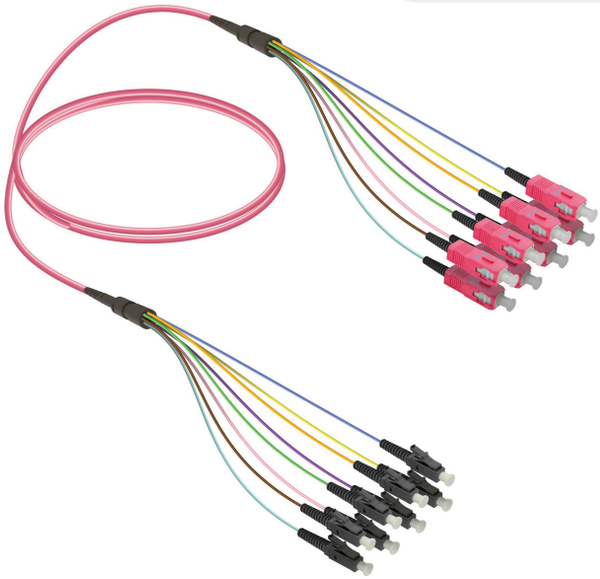

8 Fibers Multi Mode Fanout | 0.9 mm

Connector Specifications

LC Connector Compliance	IEC 61754-20, TIA 604-10-A, RoHS
SC Connector Compliance	IEC 61754-4, TIA 604-3, RoHS
One Side Connector Count	8 Connectors
Alignment Technology	Full ceramic ferrule (Zirconia ZrO_2)
Operating Temperature	-40°C to +85°C
Flammability	UL94 V-0
Durability	< 0.1dB typical change for > 500 matings

Cable Specifications

- 8 core distribution fiber optic cable
- CPR: Dca, s2, d0, a1
- Cable Diameter: 3.0 mm / Subunit Diameter: 0.9 mm
- Length tolerance is ± 50 mm
- Max. Tensile Strength: 200N
- Min. Bending Radius 20 mm
- Cable Color: OM3: Aqua; OM4: Violet

Optical Performance

Insertion Loss IEC 61300-3-4 Method B	Multi Mode ≤ 0.30dB
Return Loss IEC61300-3-6 Method B	Multi Mode ≥ 35dB

Endface Control Parameters

Geometry Inspection	IEC 61755-3-1 IEC 61755-3-2
Visual Inspection	IEC 61300-3-35

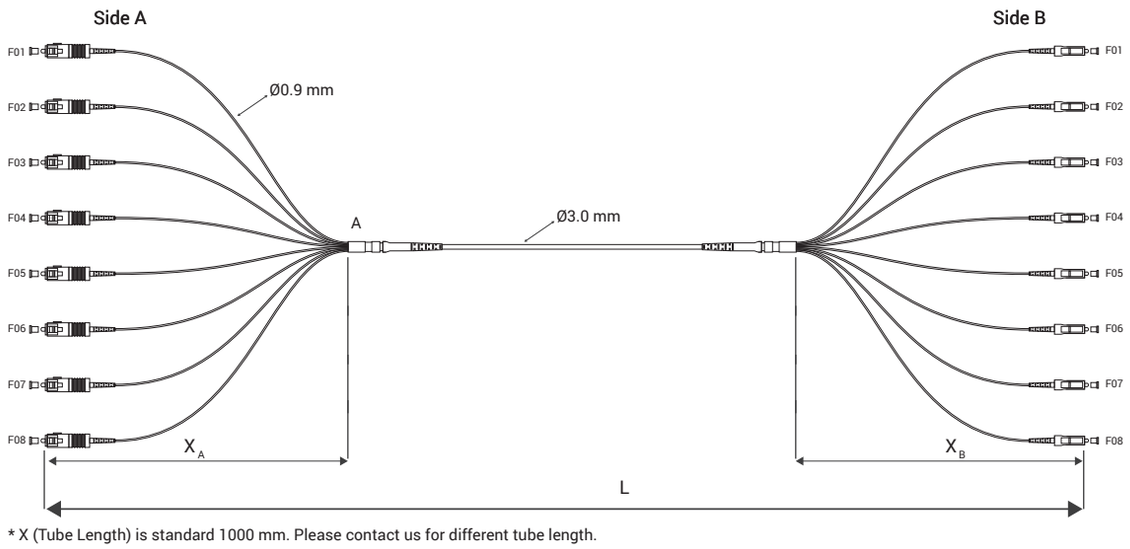

* X (Tube Length) is standard 1000 mm. Please contact us for different tube length.

Sample Coding I - PC - 08 - FC - 309 - M4 - 08SCS - 08LCS - 005M

Type	Type	Fiber Count	Cable Type	Diameter	Fiber Type	1. Connector	2. Connector	Length
Indoor: I	Patch Cord: PC	8 Fibers: 08	Fanout: FC	3.0/0.9 mm: 309	MM G.651 OM3: M3 MM G.651 OM4: M4	SC-UPC: 08SCS LC-UPC: 08LCS	SC-UPC: 08SCS LC-UPC: 08LCS	___M

8 Fibers Single Mode Fanout | 1.8 mm

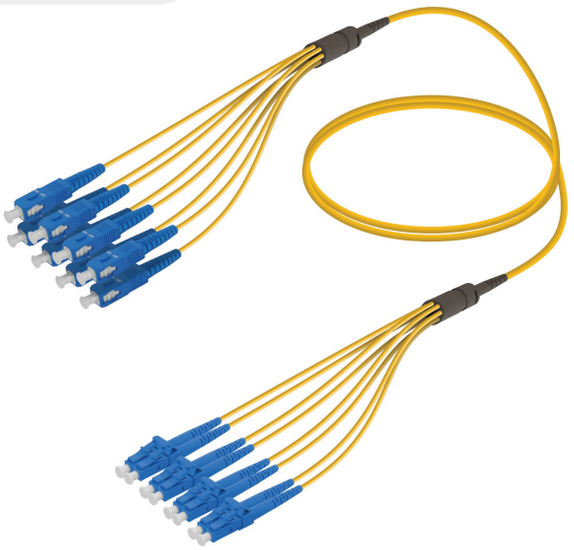

Connector Specifications

LC Connector Compliance	IEC 61754-20, TIA 604-10-A, RoHS
SC Connector Compliance	IEC 61754-4, TIA 604-3, RoHS
One Side Connector Count	8 Connectors
Alignment Technology	Full ceramic ferrule (Zirconia ZrO_2)
Operating Temperature	-40°C to +85°C
Flammability	UL94 V-0
Durability	< 0.1dB typical change for > 500 matings

Optical Performance

Insertion Loss IEC 61300-3-4 Method B	Single Mode ≤ 0.30dB
Return Loss IEC61300-3-6 Method B	Single Mode UPC: ≥ 50dB Single Mode APC: ≥ 60dB

Endface Control Parameters

Geometry Inspection	UPC : IEC 61755-3-1 APC : IEC 61755-3-2
Visual Inspection	IEC 61300-3-35

Cable Specifications

- 8 core distribution fiber optic cable
- CPR: Dca, s2, d0, a1
- Cable Diameter: 3.0 mm / Subunit Diameter: 1.8 mm
- Length tolerance is ± 50 mm
- Max. Tensile Strength: 200N
- Min. Bending Radius 20 mm
- Cable Color is Yellow

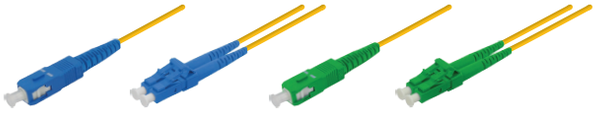

SC-UPC LC-UPC SC-APC LC-APC

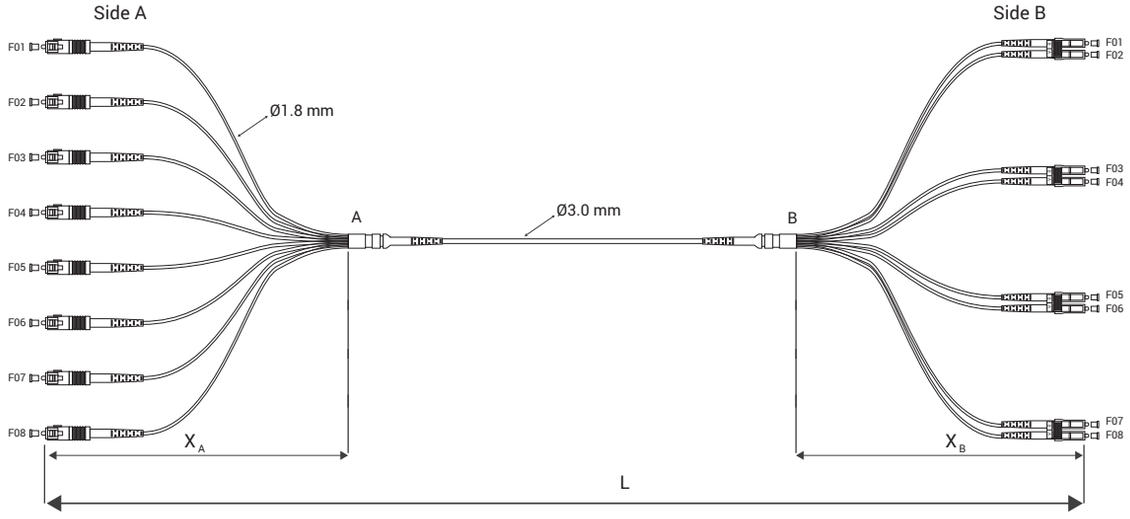

* X (Tube Length) is standard 1000 mm. Please contact us for different tube length.

Sample Coding I - PC - 08 - FC - 318 - A2 - 08SCS - 04LCD - 005M

Type	Type	Fiber Count	Cable Type	Diameter	Fiber Type	1. Connector	2. Connector	Length
Indoor: I	Patch Cord: PC	8 Fibers: 08	Fanout: FC	3.0/1.8 mm: 318	SM G.657 A2: A2	SC-UPC: 08SCS SC-APC: 08SAS LC-UPC: 04LCD LC-APC: 04LAD	SC-UPC: 08SCS SC-APC: 08SAS LC-UPC: 04LCD LC-APC: 04LAD	___M

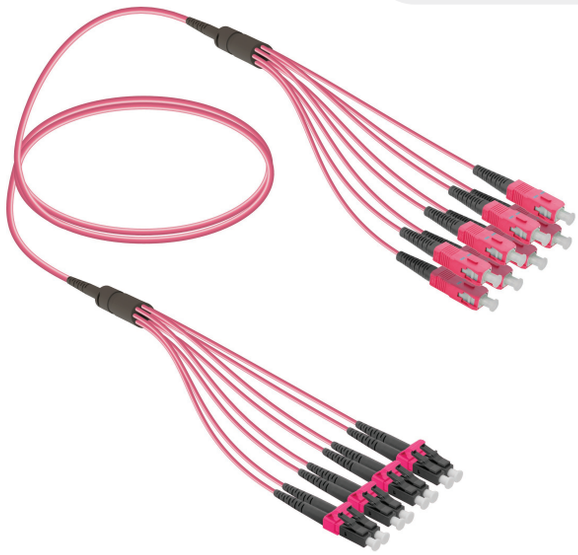

8 Fibers Multi Mode Fanout | 1.8 mm

Connector Specifications

LC Connector Compliance	IEC 61754-20, TIA 604-10-A, RoHS
SC Connector Compliance	IEC 61754-4, TIA 604-3, RoHS
One Side Connector Count	8 Connectors
Alignment Technology	Full ceramic ferrule (Zirconia ZrO_2)
Operating Temperature	-40°C to +85°C
Flammability	UL94 V-0
Durability	< 0.1dB typical change for > 500 matings

Cable Specifications

- 8 core distribution fiber optic cable
- CPR: Dca, s2, d0, a1
- Cable Diameter: 3.0 mm / Subunit Diameter: 1.8 mm
- Length tolerance is ± 50 mm
- Max. Tensile Strength: 200N
- Min. Bending Radius 20 mm
- Cable Color: OM3: Aqua; OM4: Violet

SC OM3 LC OM3 SC OM4 LC OM4

Optical Performance

Insertion Loss IEC 61300-3-4 Method B	Multi Mode ≤ 0.30 dB
Return Loss IEC61300-3-6 Method B	Multi Mode ≥ 35 dB

Endface Control Parameters

Geometry Inspection	IEC 61755-3-1 IEC 61755-3-2
Visual Inspection	IEC 61300-3-35

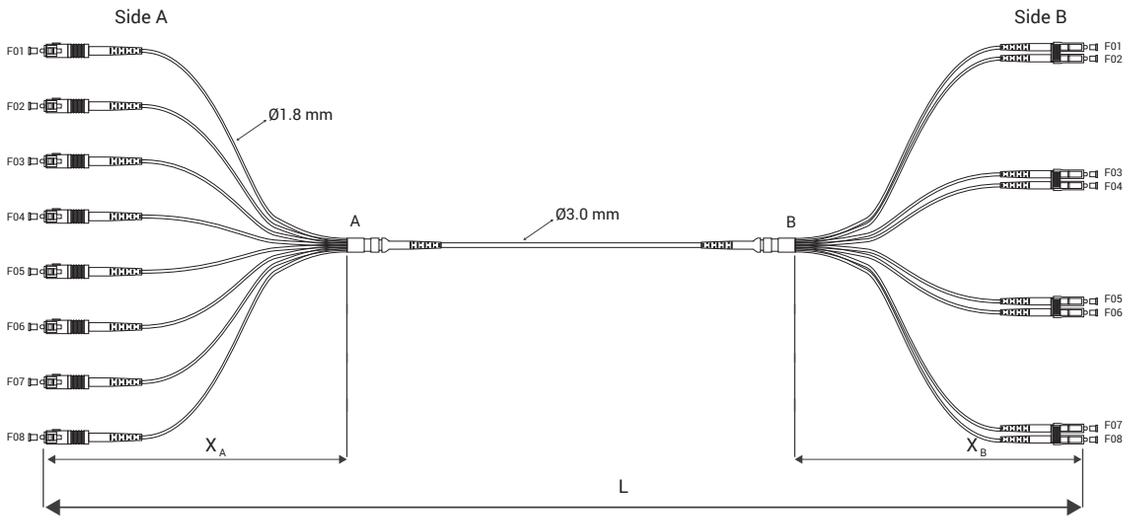

* X (Tube Length) is standard 1000 mm. Please contact us for different tube length.

Sample Coding I - PC - 08 - FC - 318 - M4 - 08SCS - 04LCD - 005M

Type	Type	Fiber Count	Cable Type	Diameter	Fiber Type	1. Connector	2. Connector	Length
Indoor: I	Patch Cord: PC	8 Fibers: 08	Fanout: FC	3.0/1.8 mm: 318	MM G.651 OM3: M3 MM G.651 OM4: M4	SC-UPC: 08SCS LC-UPC: 04LCD	SC-UPC: 08SCS LC-UPC: 04LCD	___M

12 Fibers Single Mode Fanout | 0.9 mm

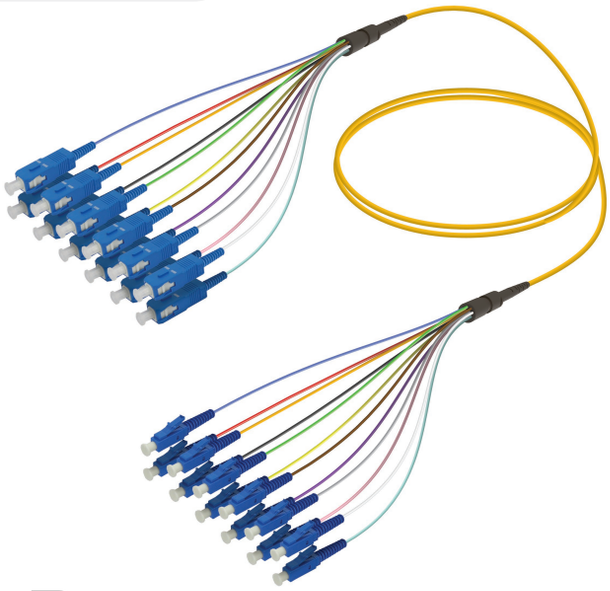

Connector Specifications

LC Connector Compliance	IEC 61754-20, TIA 604-10-A, RoHS
SC Connector Compliance	IEC 61754-4, TIA 604-3, RoHS
One Side Connector Count	12 Connectors
Alignment Technology	Full ceramic ferrule (Zirconia ZrO_2)
Operating Temperature	-40°C to +85°C
Flammability	UL94 V-0
Durability	< 0.1dB typical change for > 500 matings

Optical Performance

Insertion Loss IEC 61300-3-4 Method B	Single Mode ≤ 0.30dB
Return Loss IEC61300-3-6 Method B	Single Mode UPC: ≥ 50dB Single Mode APC: ≥ 60dB

Endface Control Parameters

Geometry Inspection	UPC : IEC 61755-3-1 APC : IEC 61755-3-2
Visual Inspection	IEC 61300-3-35

Cable Specifications

- 12 core distribution fiber optic cable
- CPR: Dca, s2, d0, a1
- Cable Diameter: 3.0 mm / Subunit Diameter: 0.9 mm
- Length tolerance is ± 50 mm
- Max. Tensile Strength: 200N
- Min. Bending Radius 20 mm
- Cable Color is Yellow

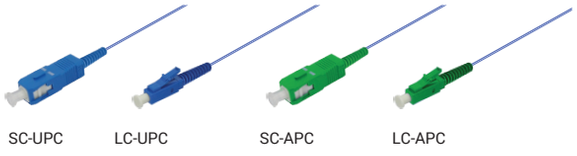

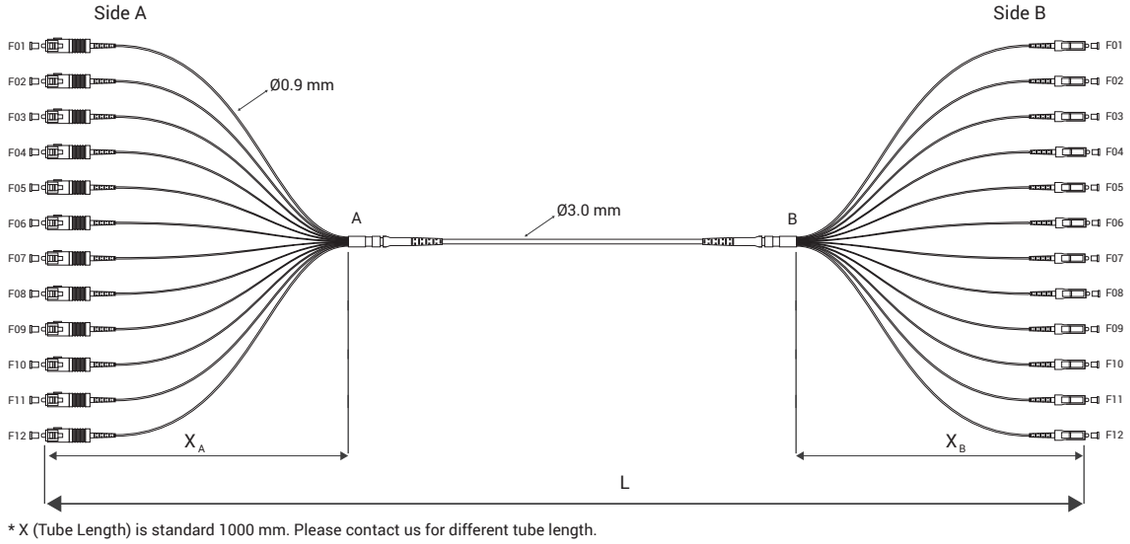

* X (Tube Length) is standard 1000 mm. Please contact us for different tube length.

Sample Coding I - PC - 12 - FC - 309 - A2 - 12SCS - 12LCS - 005M

Type	Type	Fiber Count	Cable Type	Diameter	Fiber Type	1. Connector	2. Connector	Length
Indoor: I	Patch Cord: PC	12 Fibers: 12	Fanout: FC	3.0/0.9 mm: 309	SM G.657 A2: A2	SC-UPC: 12SCS SC-APC: 12SAS LC-UPC: 12LCS LC-APC: 12LAS	SC-UPC: 12SCS SC-APC: 12SAS LC-UPC: 12LCS LC-APC: 12LAS	___M

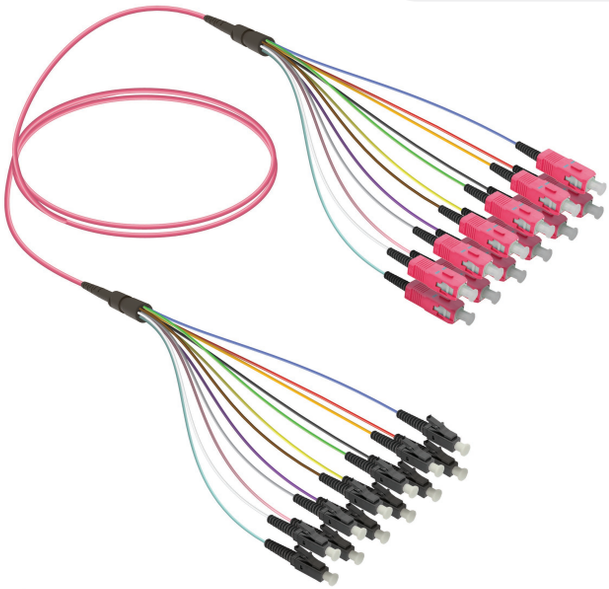

12 Fibers Multi Mode Fanout | 0.9 mm

Connector Specifications

LC Connector Compliance	IEC 61754-20, TIA 604-10-A, RoHS
SC Connector Compliance	IEC 61754-4, TIA 604-3, RoHS
One Side Connector Count	12 Connectors
Alignment Technology	Full ceramic ferrule (Zirconia ZrO_2)
Operating Temperature	-40°C to +85°C
Flammability	UL94 V-0
Durability	< 0.1dB typical change for > 500 matings

Cable Specifications

- 12 core distribution fiber optic cable
- CPR: Dca, s2, d0, a1
- Cable Diameter: 3.0 mm / Subunit Diameter: 0.9 mm
- Length tolerance is ± 50 mm
- Max. Tensile Strength: 200N
- Min. Bending Radius 20 mm
- Cable Color: OM3: Aqua; OM4: Violet

Optical Performance

Insertion Loss IEC 61300-3-4 Method B	Multi Mode ≤ 0.30 dB
Return Loss IEC61300-3-6 Method B	Multi Mode ≥ 35 dB

Endface Control Parameters

Geometry Inspection	IEC 61755-3-1 IEC 61755-3-2
Visual Inspection	IEC 61300-3-35

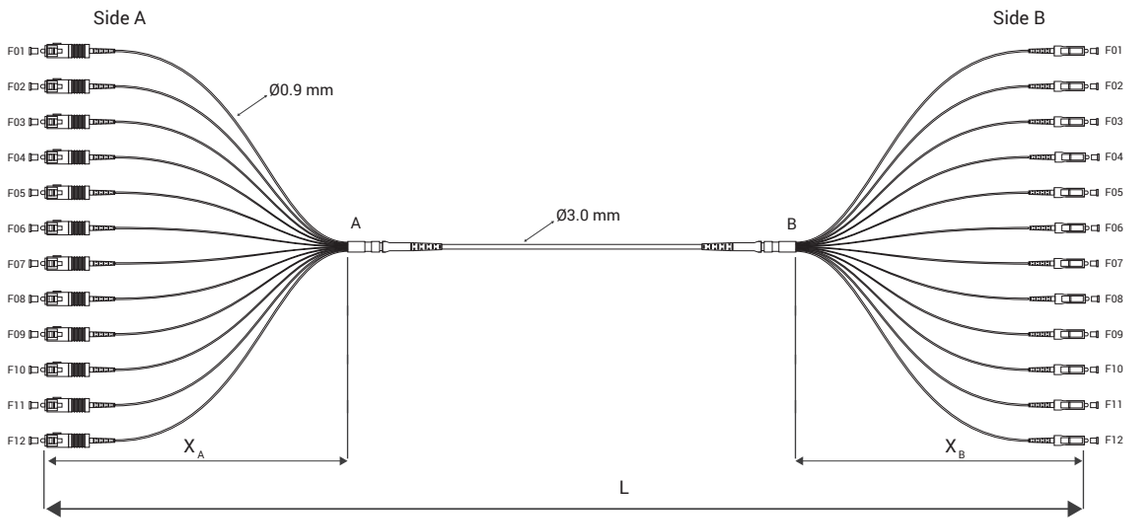

* X (Tube Length) is standard 1000 mm. Please contact us for different tube length.

Sample Coding I - PC - 12 - FC - 309 - M4 - 12SCS - 12LCS - 005M

Type	Type	Fiber Count	Cable Type	Diameter	Fiber Type	1. Connector	2. Connector	Length
Indoor: I	Patch Cord: PC	12 Fibers: 12	Fanout: FC	3.0/0.9 mm: 309	MM G.651 OM3: M3 MM G.651 OM4: M4	SC-UPC: 12SCS LC-UPC: 12LCS	SC-UPC: 12SCS LC-UPC: 12LCS	___M

12 Fibers Single Mode Fanout | 1.8 mm

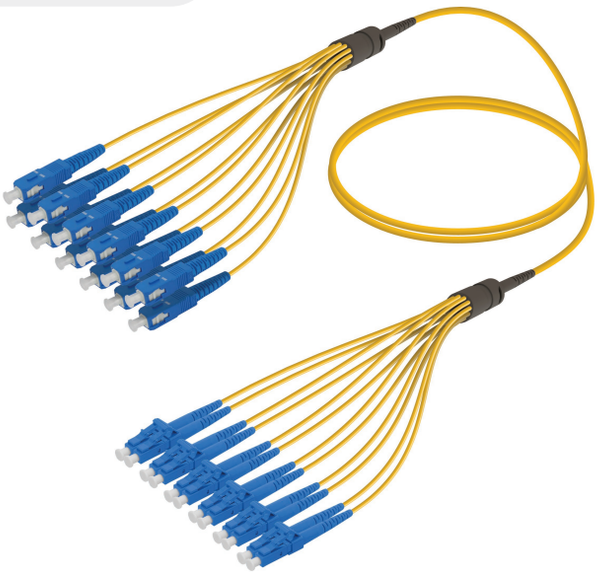

Connector Specifications

LC Connector Compliance	IEC 61754-20, TIA 604-10-A, RoHS
SC Connector Compliance	IEC 61754-4, TIA 604-3, RoHS
One Side Connector Count	12 Connectors
Alignment Technology	Full ceramic ferrule (Zirconia ZrO_2)
Operating Temperature	-40°C to +85°C
Flammability	UL94 V-0
Durability	< 0.1dB typical change for > 500 matings

Optical Performance

Insertion Loss IEC 61300-3-4 Method B	Single Mode ≤ 0.30dB
Return Loss IEC61300-3-6 Method B	Single Mode UPC: ≥ 50dB Single Mode APC: ≥ 60dB

Endface Control Parameters

Geometry Inspection	UPC : IEC 61755-3-1 APC : IEC 61755-3-2
Visual Inspection	IEC 61300-3-35

Cable Specifications

- 12 core distribution fiber optic cable
- CPR: Dca, s2, d0, a1
- Cable Diameter: 3.0 mm / Subunit Diameter: 1.8 mm
- Length tolerance is ± 50 mm
- Max. Tensile Strength: 200N
- Min. Bending Radius 20 mm
- Cable Color is Yellow

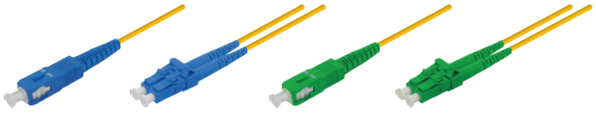

SC-UPC LC-UPC SC-APC LC-APC

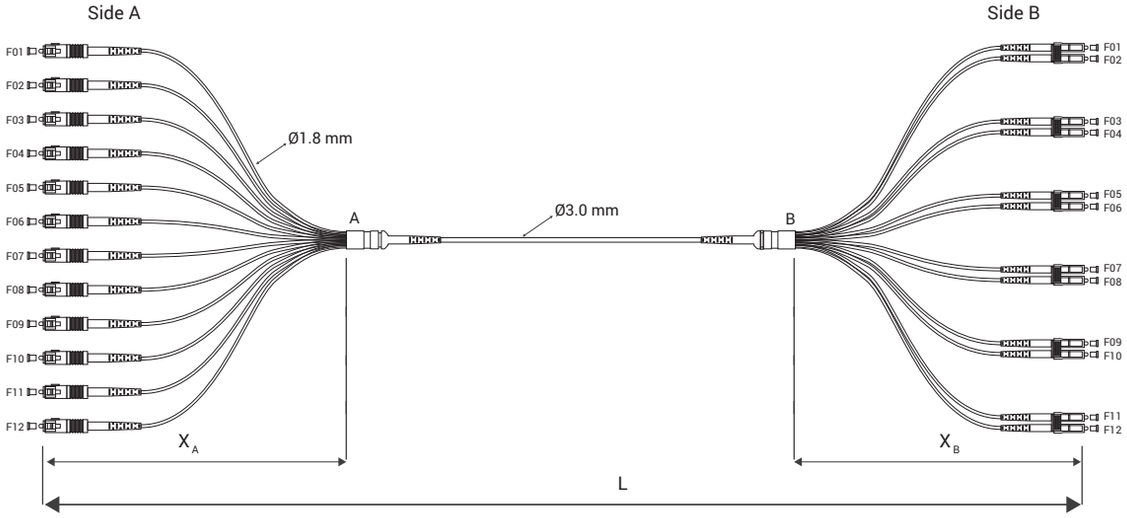

* X (Tube Length) is standard 1000 mm. Please contact us for different tube length.

Sample Coding I - PC - 12 - FC - 318 - A2 - 12SCS - 06LCD - 005M

Type	Type	Fiber Count	Cable Type	Diameter	Fiber Type	1. Connector	2. Connector	Length
Indoor: I	Patch Cord: PC	12 Fibers: 12	Fanout: FC	3.0/1.8 mm: 318	SM G.657 A2: A2	SC-UPC: 12SCS SC-APC: 12SAS LC-UPC: 06LCD LC-APC: 06LAD	SC-UPC: 12SCS SC-APC: 12SAS LC-UPC: 06LCD LC-APC: 06LAD	___M

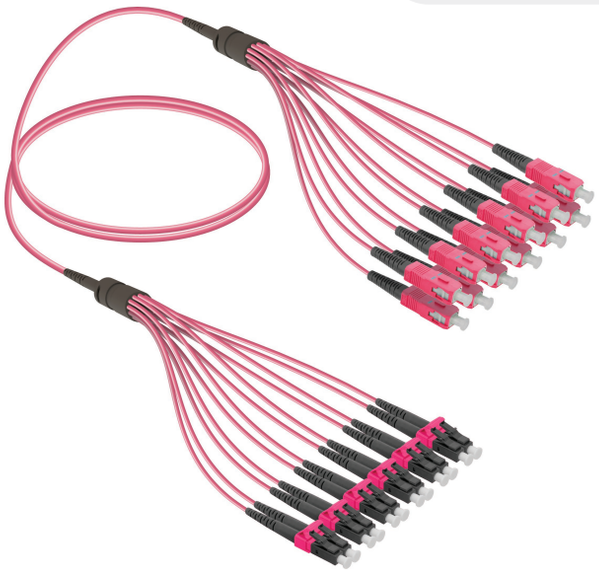

12 Fibers Multi Mode Fanout | 1.8 mm

Connector Specifications

LC Connector Compliance	IEC 61754-20, TIA 604-10-A, RoHS
SC Connector Compliance	IEC 61754-4, TIA 604-3, RoHS
One Side Connector Count	12 Connectors
Alignment Technology	Full ceramic ferrule (Zirconia ZrO_2)
Operating Temperature	-40°C to +85°C
Flammability	UL94 V-0
Durability	< 0.1dB typical change for > 500 matings

Cable Specifications

- 12 core distribution fiber optic cable
- CPR: Dca, s2, d0, a1
- Cable Diameter: 3.0 mm / Subunit Diameter: 1.8 mm
- Length tolerance is ± 50 mm
- Max. Tensile Strength: 200N
- Min. Bending Radius 20 mm
- Cable Color: OM3: Aqua; OM4: Violet

SC OM3 LC OM3 SC OM4 LC OM4

Optical Performance

Insertion Loss IEC 61300-3-4 Method B	Multi Mode ≤ 0.30 dB
Return Loss IEC61300-3-6 Method B	Multi Mode ≥ 35 dB

Endface Control Parameters

Geometry Inspection	IEC 61755-3-1 IEC 61755-3-2
Visual Inspection	IEC 61300-3-35

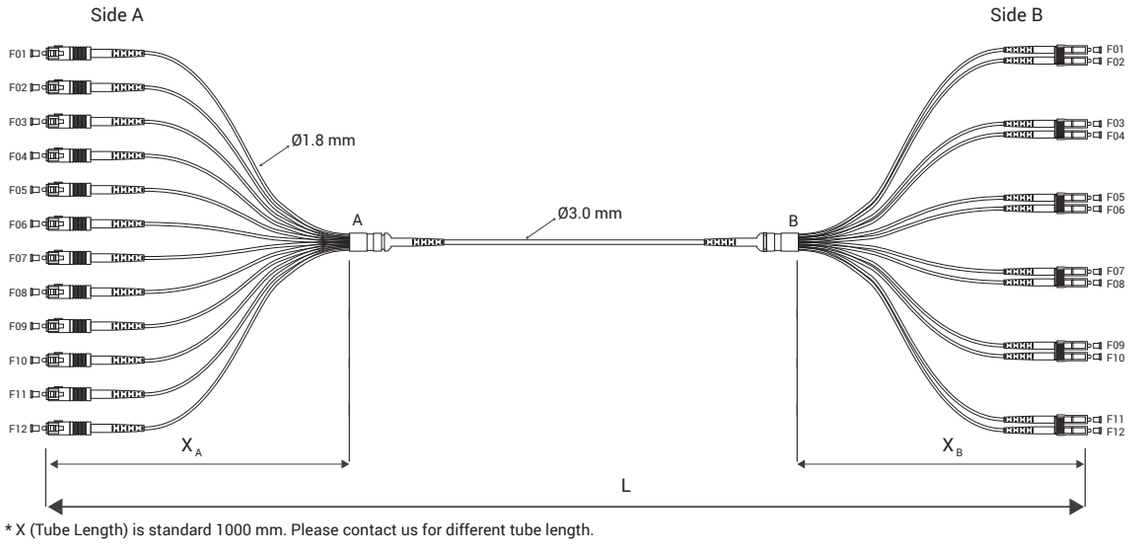

* X (Tube Length) is standard 1000 mm. Please contact us for different tube length.

Sample Coding I - PC - 12 - FC - 318 - M4 - 12SCS - 06LCD - 005M

Type	Type	Fiber Count	Cable Type	Diameter	Fiber Type	1. Connector	2. Connector	Length
Indoor: I	Patch Cord: PC	12 Fibers: 12	Fanout: FC	3.0/1.8 mm: 318	MM G.651 OM3: M3 MM G.651 OM4: M4	SC-UPC: 12SCS LC-UPC: 06LCD	SC-UPC: 12SCS LC-UPC: 06LCD	___M

24 Fibers Single Mode Fanout | 0.9 mm

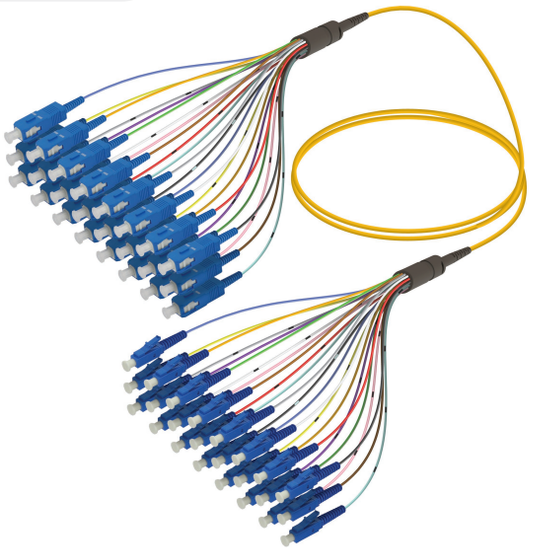

Connector Specifications

LC Connector Compliance	IEC 61754-20, TIA 604-10-A, RoHS
SC Connector Compliance	IEC 61754-4, TIA 604-3, RoHS
One Side Connector Count	24 Connectors
Alignment Technology	Full ceramic ferrule (Zirconia ZrO_2)
Operating Temperature	-40°C to +85°C
Flammability	UL94 V-0
Durability	< 0.1dB typical change for > 500 matings

Optical Performance

Insertion Loss IEC 61300-3-4 Method B	Single Mode ≤ 0.30dB
Return Loss IEC61300-3-6 Method B	Single Mode UPC: ≥ 50dB Single Mode APC: ≥ 60dB

Endface Control Parameters

Geometry Inspection	UPC : IEC 61755-3-1 APC : IEC 61755-3-2
Visual Inspection	IEC 61300-3-35

Cable Specifications

- 24 core distribution fiber optic cable
- CPR: Dca, s2, d0, a1
- Cable Diameter: 3.0 mm / Subunit Diameter: 0.9 mm
- Length tolerance is ± 50 mm
- Max. Tensile Strength: 200N
- Min. Bending Radius 20 mm
- Cable Color is Yellow

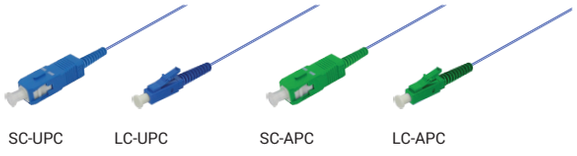

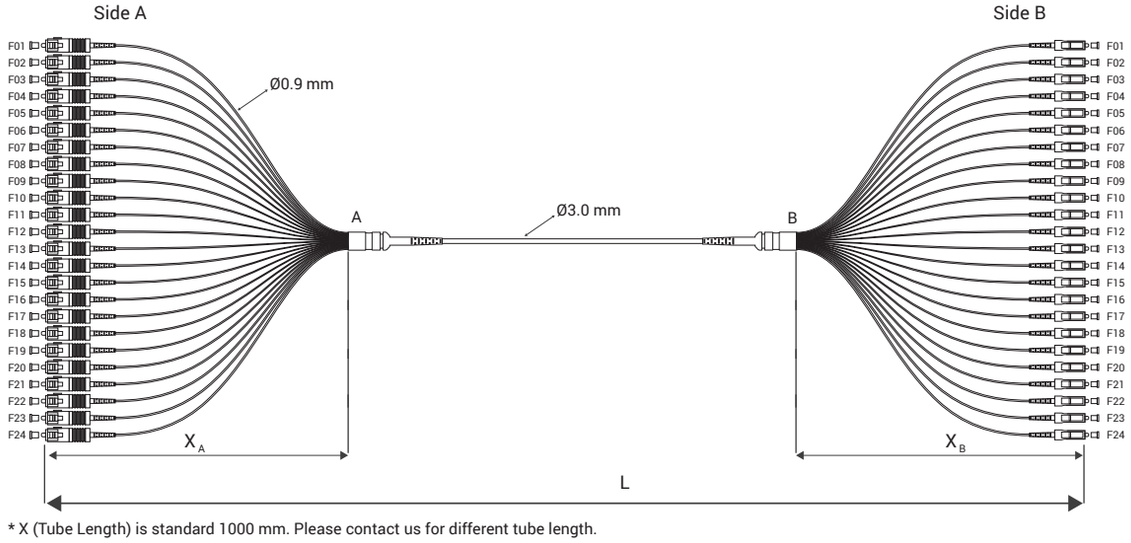

* X (Tube Length) is standard 1000 mm. Please contact us for different tube length.

Sample Coding I - PC - 24 - FC - 309 - A2 - 24SCS - 24LCS - 005M

Type	Type	Fiber Count	Cable Type	Diameter	Fiber Type	1. Connector	2. Connector	Length
Indoor: I	Patch Cord: PC	24 Fibers: 24	Fanout: FC	3.0/0.9 mm: 309	SM G.657 A2: A2	SC-UPC: 24SCS SC-APC: 24SAS LC-UPC: 24LCS LC-APC: 24LAS	SC-UPC: 24SCS SC-APC: 24SAS LC-UPC: 24LCS LC-APC: 24LAS	___M

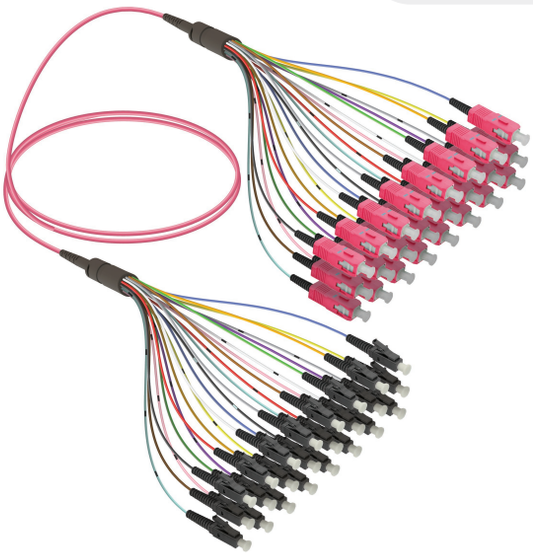

24 Fibers Multi Mode Fanout | 0.9 mm

Connector Specifications

LC Connector Compliance	IEC 61754-20, TIA 604-10-A, RoHS
SC Connector Compliance	IEC 61754-4, TIA 604-3, RoHS
One Side Connector Count	24 Connectors
Alignment Technology	Full ceramic ferrule (Zirconia ZrO_2)
Operating Temperature	-40°C to +85°C
Flammability	UL94 V-0
Durability	< 0.1dB typical change for > 500 matings

Cable Specifications

- 24 core distribution fiber optic cable
- CPR: Dca, s2, d0, a1
- Cable Diameter: 3.0 mm / Subunit Diameter: 0.9 mm
- Length tolerance is ± 50 mm
- Max. Tensile Strength: 200N
- Min. Bending Radius 20 mm
- Cable Color: OM3: Aqua; OM4: Violet

Optical Performance

Insertion Loss IEC 61300-3-4 Method B	Multi Mode ≤ 0.30 dB
Return Loss IEC61300-3-6 Method B	Multi Mode ≥ 35 dB

Endface Control Parameters

Geometry Inspection	IEC 61755-3-1 IEC 61755-3-2
Visual Inspection	IEC 61300-3-35

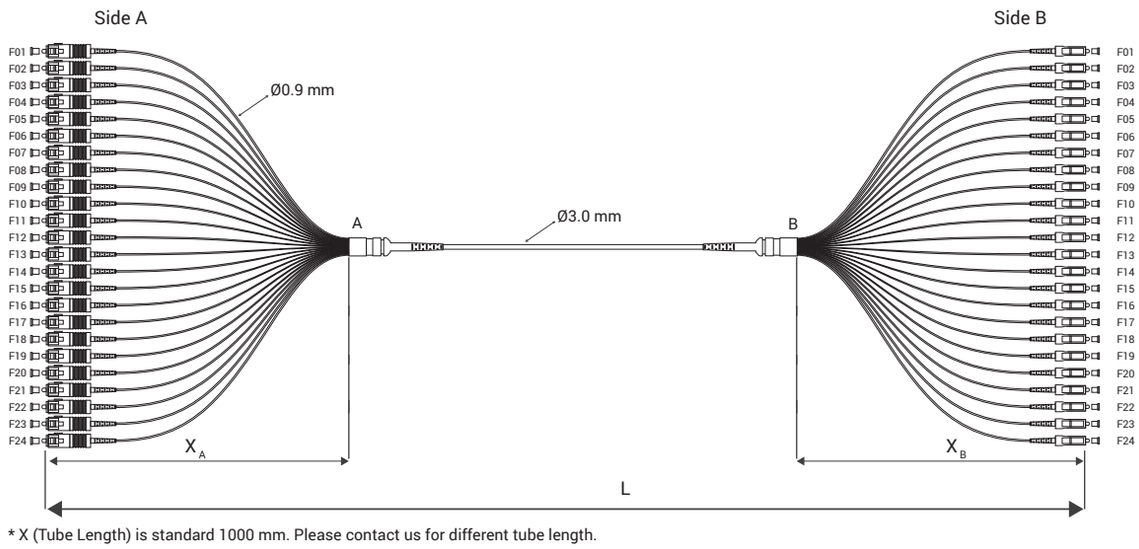

* X (Tube Length) is standard 1000 mm. Please contact us for different tube length.

Sample Coding I - PC - 24 - FC - 309 - M4 - 24SCS - 24LCS - 005M

Type	Type	Fiber Count	Cable Type	Diameter	Fiber Type	1. Connector	2. Connector	Length
Indoor: I	Patch Cord: PC	24 Fibers: 24	Fanout: FC	3.0/0.9 mm: 309	MM G.651 OM3: M3 MM G.651 OM4: M4	SC-UPC: 24SCS LC-UPC: 24LCS	SC-UPC: 24SCS LC-UPC: 24LCS	___M

24 Fibers Single Mode Fanout | 1.8 mm

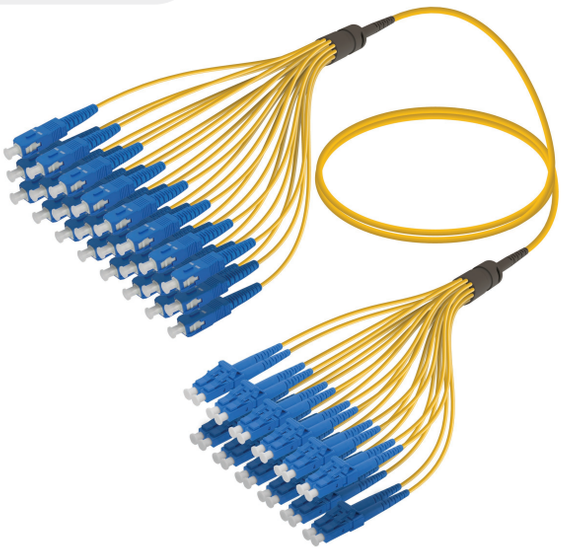

Connector Specifications

LC Connector Compliance	IEC 61754-20, TIA 604-10-A, RoHS
SC Connector Compliance	IEC 61754-4, TIA 604-3, RoHS
One Side Connector Count	24 Connectors
Alignment Technology	Full ceramic ferrule (Zirconia ZrO_2)
Operating Temperature	-40°C to +85°C
Flammability	UL94 V-0
Durability	< 0.1dB typical change for > 500 matings

Optical Performance

Insertion Loss IEC 61300-3-4 Method B	Single Mode ≤ 0.30dB
Return Loss IEC61300-3-6 Method B	Single Mode UPC: ≥ 50dB Single Mode APC: ≥ 60dB

Endface Control Parameters

Geometry Inspection	UPC : IEC 61755-3-1 APC : IEC 61755-3-2
Visual Inspection	IEC 61300-3-35

Cable Specifications

- 24 core distribution fiber optic cable
- CPR: Dca, s2, d0, a1
- Cable Diameter: 3.0 mm / Subunit Diameter: 1.8 mm
- Length tolerance is ± 50 mm
- Max. Tensile Strength: 200N
- Min. Bending Radius 20 mm
- Cable Color is Yellow

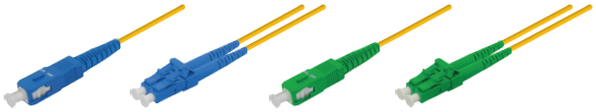

SC-UPC LC-UPC SC-APC LC-APC

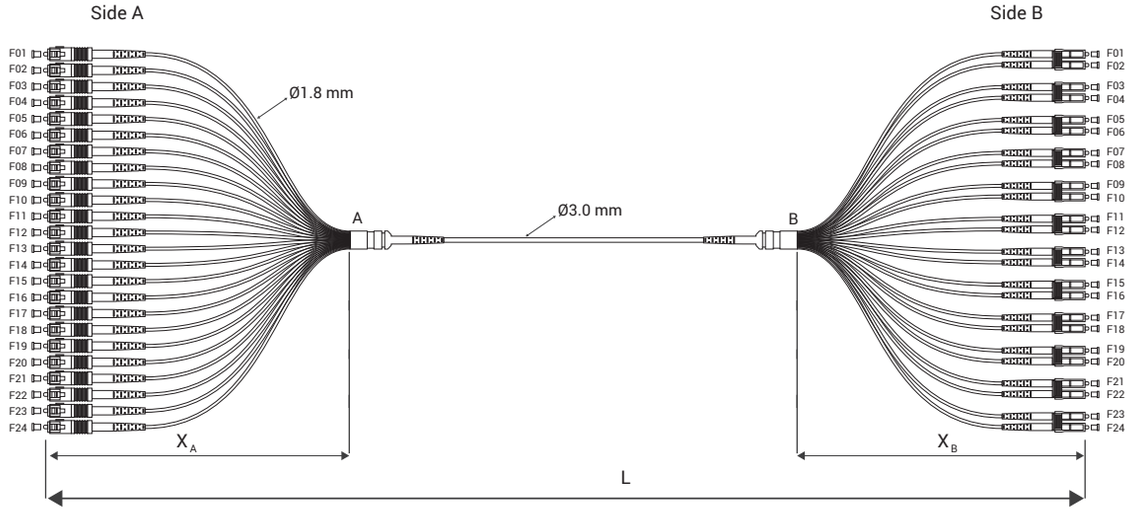

* X (Tube Length) is standard 1000 mm. Please contact us for different tube length.

Sample Coding I - PC - 24 - FC - 318 - A2 - 24SCS - 12LCD - 005M

Type	Type	Fiber Count	Cable Type	Diameter	Fiber Type	1. Connector	2. Connector	Length
Indoor: I	Patch Cord: PC	24 Fibers: 24	Fanout: FC	3.0/1.8 mm: 318	SM G.657 A2: A2	SC-UPC: 24SCS SC-APC: 24SAS LC-UPC: 12LCD LC-APC: 12LAD	SC-UPC: 24SCS SC-APC: 24SAS LC-UPC: 12LCD LC-APC: 12LAD	___M

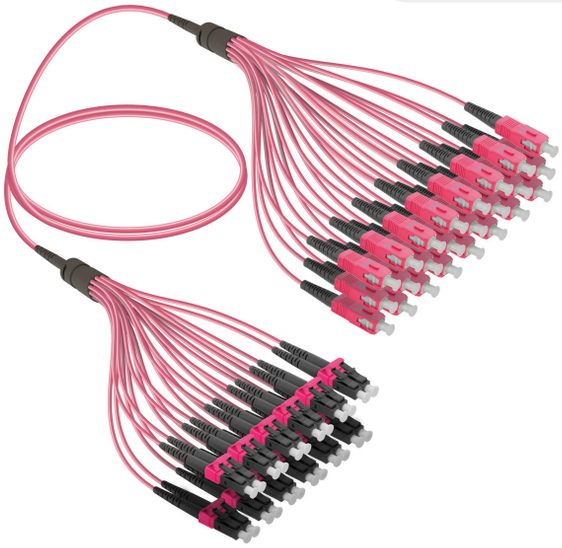

24 Fibers Multi Mode Fanout | 1.8 mm

Connector Specifications

LC Connector Compliance	IEC 61754-20, TIA 604-10-A, RoHS
SC Connector Compliance	IEC 61754-4, TIA 604-3, RoHS
One Side Connector Count	24 Connectors
Alignment Technology	Full ceramic ferrule (Zirconia ZrO_2)
Operating Temperature	-40°C to +85°C
Flammability	UL94 V-0
Durability	< 0.1dB typical change for > 500 matings

Cable Specifications

- 24 core distribution fiber optic cable
- CPR: Dca, s2, d0, a1
- Cable Diameter: 3.0 mm / Subunit Diameter: 1.8 mm
- Length tolerance is ± 50 mm
- Max. Tensile Strength: 200N
- Min. Bending Radius 20 mm
- Cable Color: OM3: Aqua; OM4: Violet

SC OM3 LC OM3 SC OM4 LC OM4

Optical Performance

Insertion Loss IEC 61300-3-4 Method B	Multi Mode ≤ 0.30 dB
Return Loss IEC61300-3-6 Method B	Multi Mode ≥ 35 dB

Endface Control Parameters

Geometry Inspection	IEC 61755-3-1 IEC 61755-3-2
Visual Inspection	IEC 61300-3-35

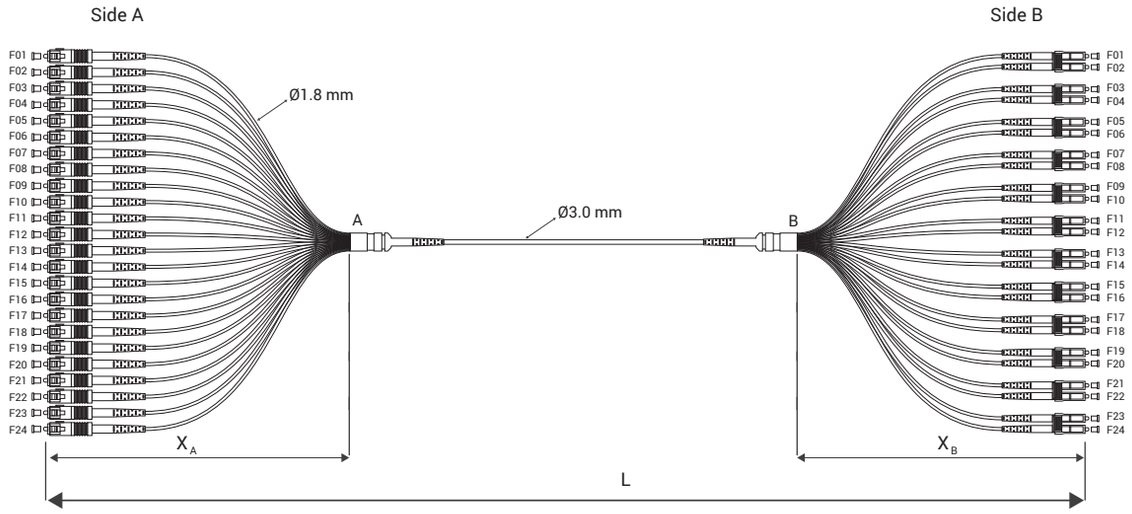

* X (Tube Length) is standard 1000 mm. Please contact us for different tube length.

Sample Coding I - PC - 24 - FC - 318 - M4 - 24SCS - 12LCD - 005M

Type	Type	Fiber Count	Cable Type	Diameter	Fiber Type	1. Connector	2. Connector	Length
Indoor: I	Patch Cord: PC	24 Fibers: 24	Fanout: FC	3.0/1.8 mm: 318	MM G.651 OM3: M3 MM G.651 OM4: M4	SC-UPC: 24SCS LC-UPC: 12LCD	SC-UPC: 24SCS LC-UPC: 12LCD	___M